Catalog #:		Type
Project:		Date
Prepared by:		

89xx-2734 Series

120V-60Hz

CCT Selectable Under Cabinet Light

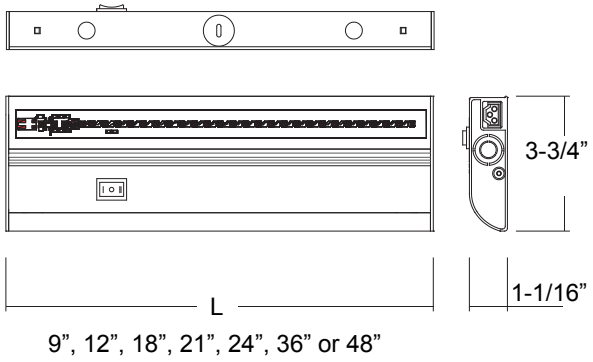

9", 12", 18", 21", 24", 36" or 48"

DESCRIPTION

This series offers three color temperature options in one product which adds a touch of warmth and elegance to any cabinet/counter top application. Low-profile, easy installation, energy efficient and maintenance free.

DESIGN FEATURES

Construction

- Aluminum housing with Ribbed Acrylic Curved Lens
- Linkable design for hardwire and plug-in

Electrical

- 120V-60Hz
- Dimmable TRIAC, 10-100%
- 50,000 hour projected life
- CCT Selectable: 2700K, 3000K, 4000K
- 90 CRI

Installation

- Hinged wiring trough for easy access to wires
- Fast Hard-wiring with snap-in connector
- Each end-cap has one 3/4" knockout and capped linkable socket
- 8966/8967: (1) 1/2" knockout located on the back side of housing
- 8968-72: (2) 1/2" knockouts located on the back side of housing

Finish

- Finish: white (WH)

Available Accessories

- 6" Connector cord: 897CN-6
- 12" Connector cord: 897CN-12
- 24" Power cord: 897PC-24
- End-to-end connector: 897CN
- Lens Replacement: 89xxL

Listing

- cCSAus Listed for damp location
- Energy Star Listed
- CEC JA8 Compliant
- LED Lamp: 5 Year Limited Warranty
- Other Components: 1 Year Limited Warranty

ORDERING GUIDE

Example: 8966WH-2734

Model #	Finish	CCT
8966: 9" **8967**: 12" **8968**: 18" **8969**: 21" **8970**: 24" **8971**: 36" **8972**: 48"	**WH** : White	**-2734** : 2700K, 3000K, 4000K

LED Lamp

Other Components

89xx-2734 Series

120V-60Hz

Specification

Model #	Size (L x D x H)	Lumens	Watts	CRI
8966__-2734	9” x 3-3/4” x 1-1/16”	Source 320lms, Delivered 250lms	4W	90
8967__-2734	12” x 3-3/4” x 1-1/16”	Source 400lms, Delivered 315lms	5W	
8968__-2734	18” x 3-3/4” x 1-1/16”	Source 630lms, Delivered 500lms	7W	
8969__-2734	21” x 3-3/4” x 1-1/16”	Source 750lms, Delivered 595lms	8W	
8970__-2734	24” x 3-3/4” x 1-1/16”	Source 850lms, Delivered 670lms	9W	
8971__-2734	36” x 3-3/4” x 1-1/16”	Source 1140lms, Delivered 900lms	13W	
8972__-2734	48” x 3-3/4” x 1-1/16”	Source 1500lms, Delivered 1190lms	17W	